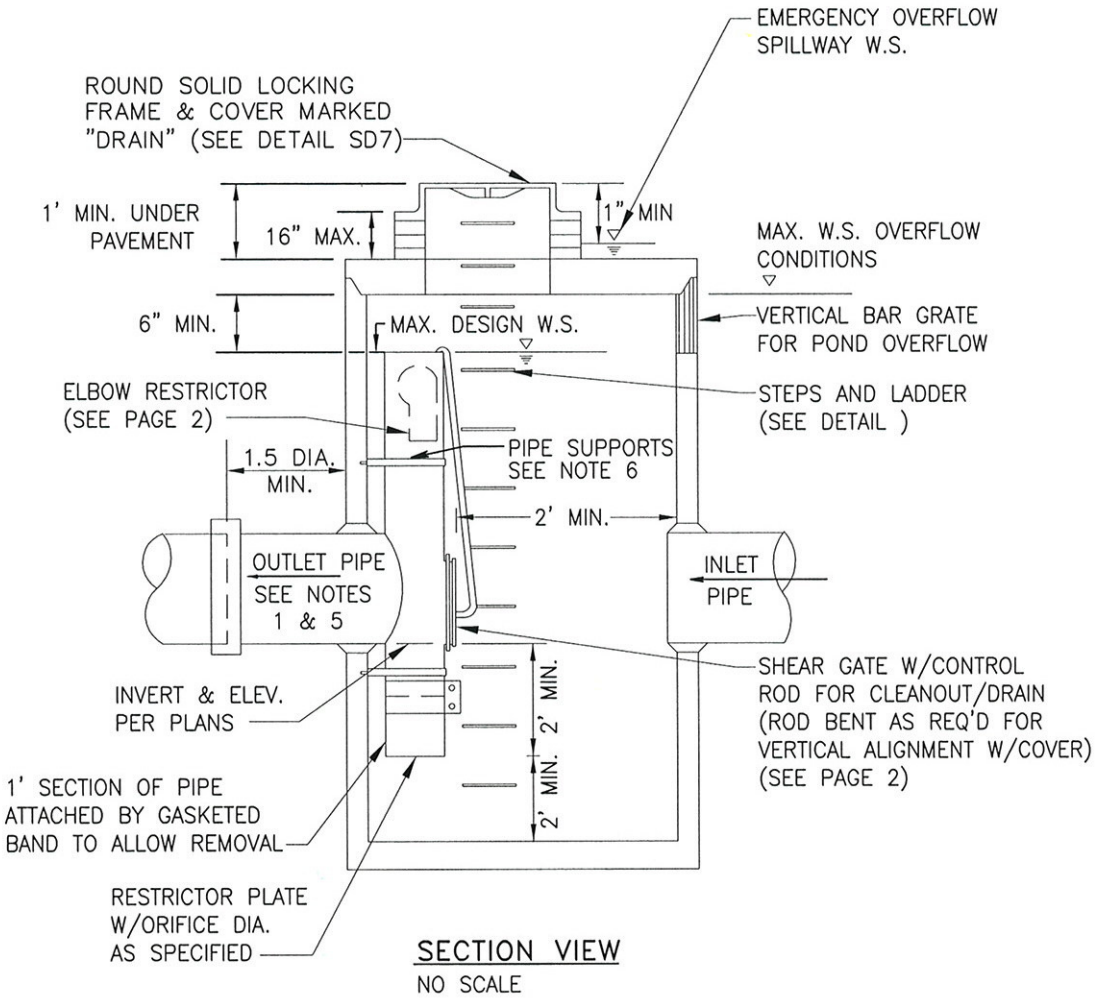

SECTION VIEW
NO SCALE

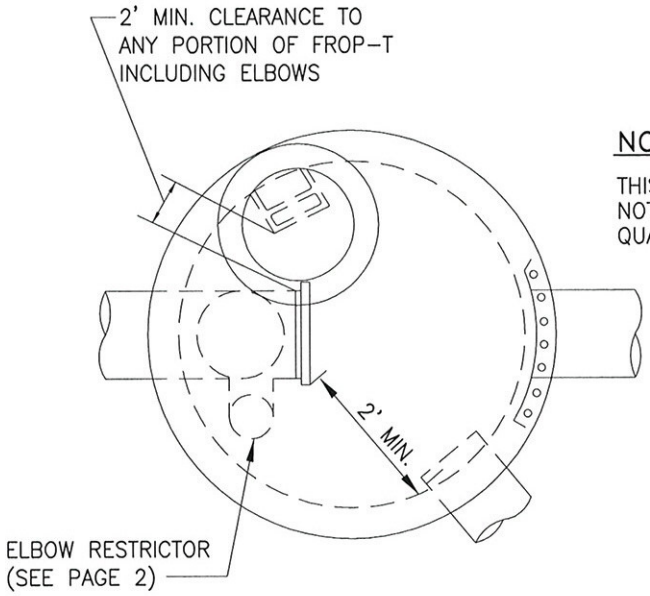

NOTE:

THIS FLOW RESTRICTOR SHALL NOT BE USED AS A WATER QUALITY CONTROL FACILITY.

Approved: June 17, 2005 City Engineer Date STORM DRAIN STANDARD DETAIL	City of BONNEY Lake	Dwg No: SD4 FLOW RESTRICTOR CATCH BASIN TYPE 2

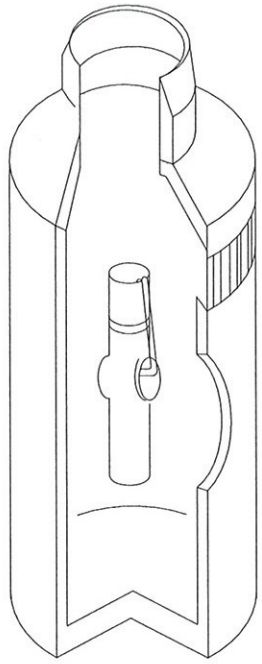

ISOMETRIC

NO SCALE

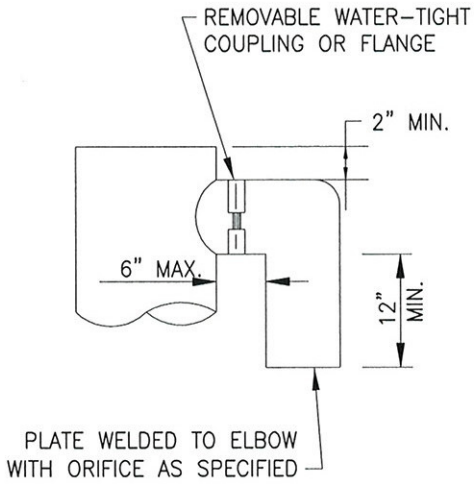

ELBOW RESTRICTOR

NO SCALE

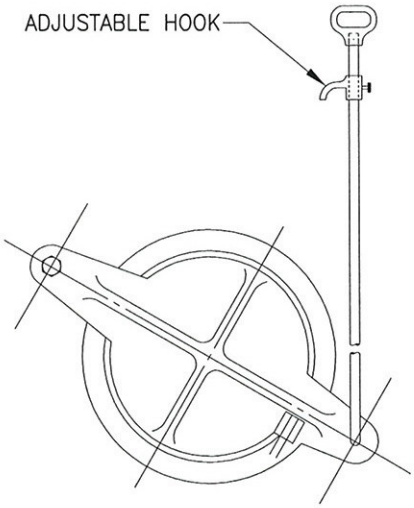

SHEAR GATE

NO SCALE

NOTES:

1. USE MIN. 54" DIA. CATCH BASIN TYPE 2. SEE DETAIL SD3.
2. INLET & OUTLET CAPACITY: 100-YR DEVELOPED DESIGN FLOW.
3. METAL PARTS: CORROSION RESISTANT. ALUMINUM PIPE
4. FRAME & LADDER OR STEPS OFFSET SO:
   A: CLEANOUT GATE IS VISIBLE FROM TOP.
   B: CLIMB-DOWN SPACE IS CLEAR OF RISER AND CLEANOUT GATE.
   C: FRAME IS CLEAR OF CURB.
5. IF METAL OUTLET PIPE CONNECTS TO CEMENT CONCRETE PIPE: OUTLET PIPE TO HAVE SMOOTH I. D. EQUAL TO CONCRETE PIPE I.D. LESS 1/4".
6. PROVIDE AT LEAST TWO 3" X .090 GAGE SUPPORT BRACKET ANCHORED CONCRETE WALL (MAX. 3'-0" VERTICAL SPACING).
7. LOCATE ELBOW RESTRICTOR(S) AS NECESSARY TO PROVIDE MIN. CLEARANCE AS SHOWN.
8. LOCATE ADDITIONAL LADDER RUNGS IN STRUCTURES USED AS ACCESS TO TANKS OR VAULTS TO ALLOW ACCESS WHEN CATCH BASIN IS FILLED WITH WATER.
9. ALL METAL PARTS AND SURFACE MUST BE MADE OF CORROSION RESISTANT MATERIAL OR GALVANIZED.
10. FILL CATCH BASIN (WITH WATER) TO INVERT LEVEL OF OUTFLOW PIPE TO PREVENT ANY OIL ESCAPING.

SHEAR GATE NOTES:

1. SHEAR GATE SHALL BE ALUMINUM, DRAINAGE SPECIALTIES (SAVANNA, GA) STANDARD OR APPROVED EQUIVALENT.
2. GATE SHALL BE 8" DIAMETER UNLESS OTHERWISE SPECIFIED.
3. GATE SHALL BE JOINED TO TEE SECTION BY BOLTING (THROUGH FLANGE), WELDING, OR OTHER SECURE MEANS.
4. LIFT ROD: AS SPECIFIED BY MANUFACTURER WITH HANDLE EXTENDING TO WITHIN ONE FOOT OF COVER AND ADJUSTABLE HOOK LOCK FASTENED TO FRAME OR UPPER HANDHOLD.

Approved: June 17, 2005 City Engineer Date STORM DRAIN STANDARD DETAIL	City of BONNEY Lake	Dwg No: SD4 FLOW RESTRICTOR CATCH BASIN TYPE 2