FIGURES

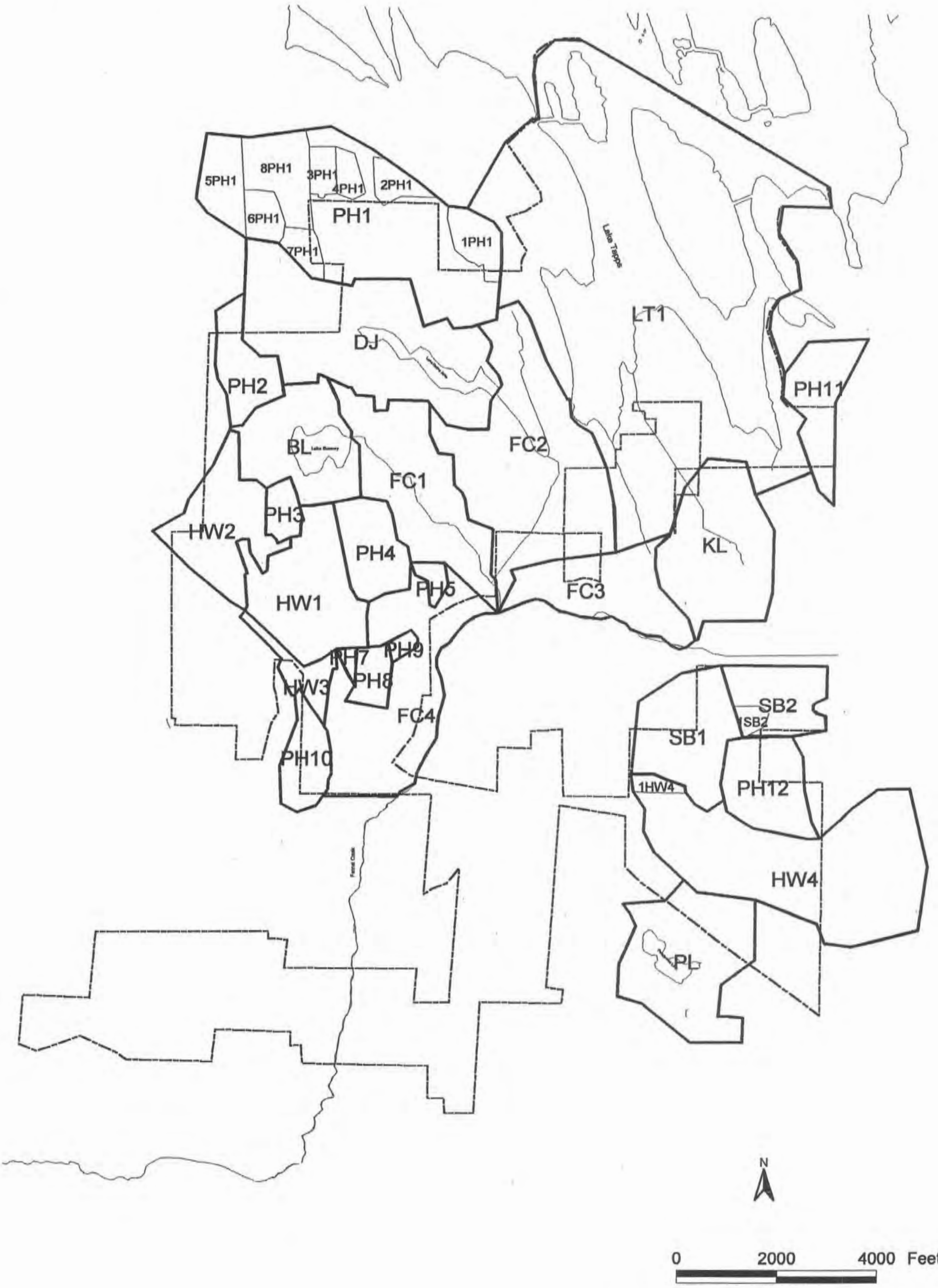

Figure 2-1
Major Drainage Basins and Sub-basins

City of Bonney Lake
Stormwater Comprehensive Plan

MONTGOMERY WATER GROUP, INC.
Water Resources Engineering

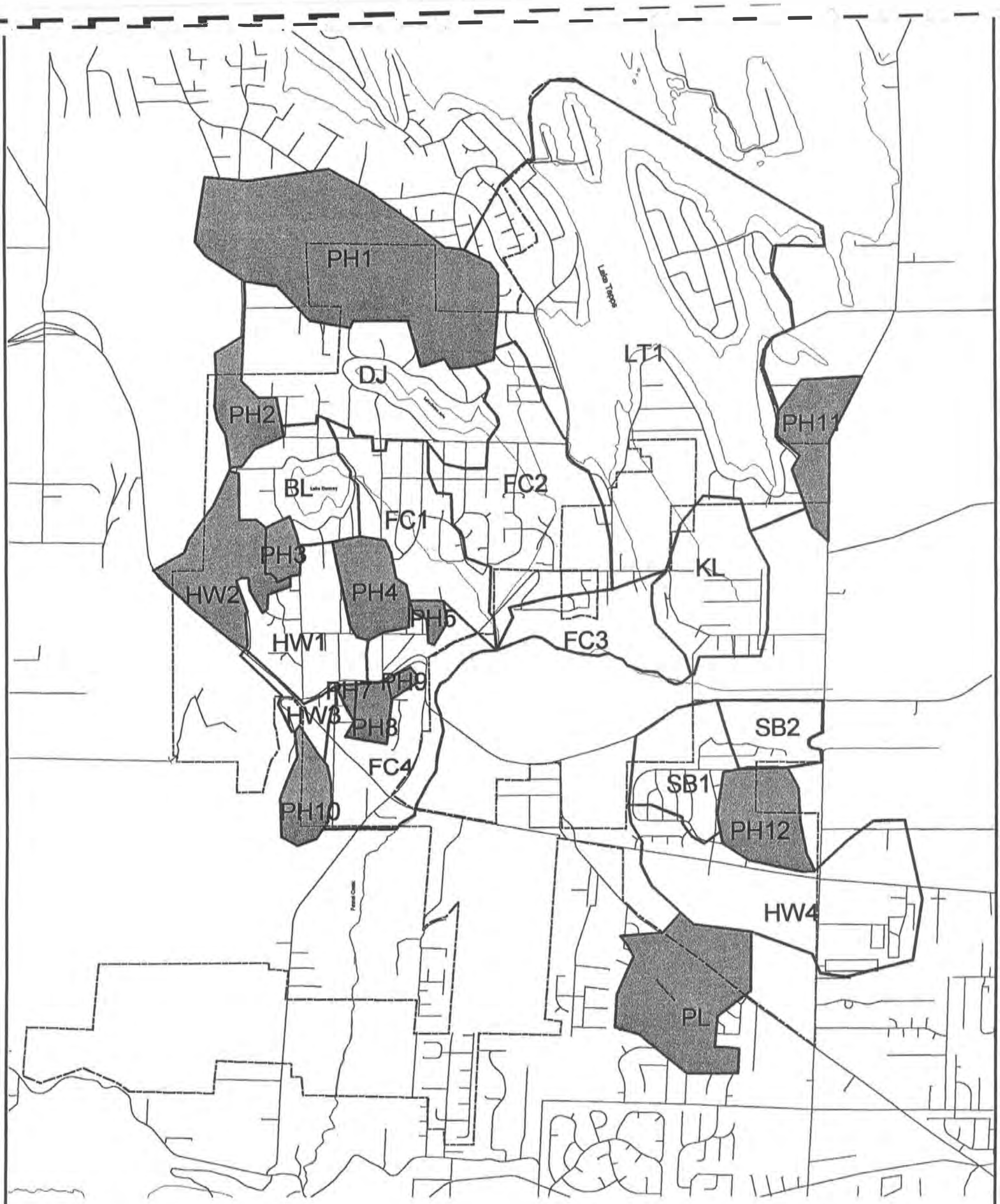

Bonney Lake City Limits

Major Basins

outlet

pothole

Lakes/Major Streams

Figure 2-2
Major Pothole
Drainage Basins

City of Bonney Lake
Stormwater Comprehensive Plan

MONTGOMERY WATER GROUP, INC.

Water Resources Engineering

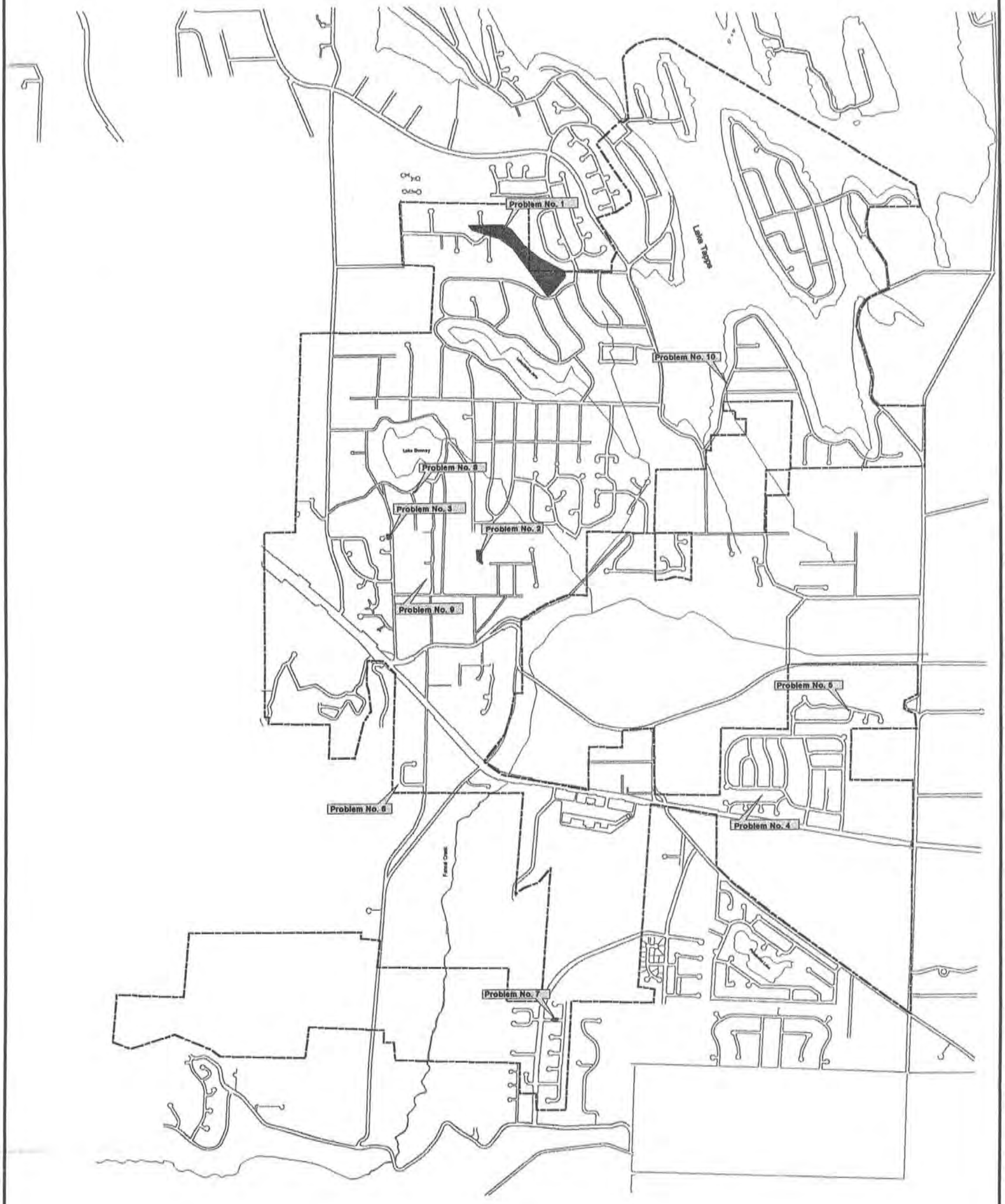

Figure 2-3
Storm Drainage
Problem Areas

City of Bonney Lake
Stormwater Comprehensive Plan

MONTGOMERY WATER GROUP, INC.
Water Resources Engineering

Figure 3-1
Stormwater CIP Project Locations/Priorities

City of Bonney Lake
Stormwater Comprehensive Plan

MONTGOMERY WATER GROUP, INC.
Water Resources Engineering

STORM DRAINAGE SYSTEMS MAP

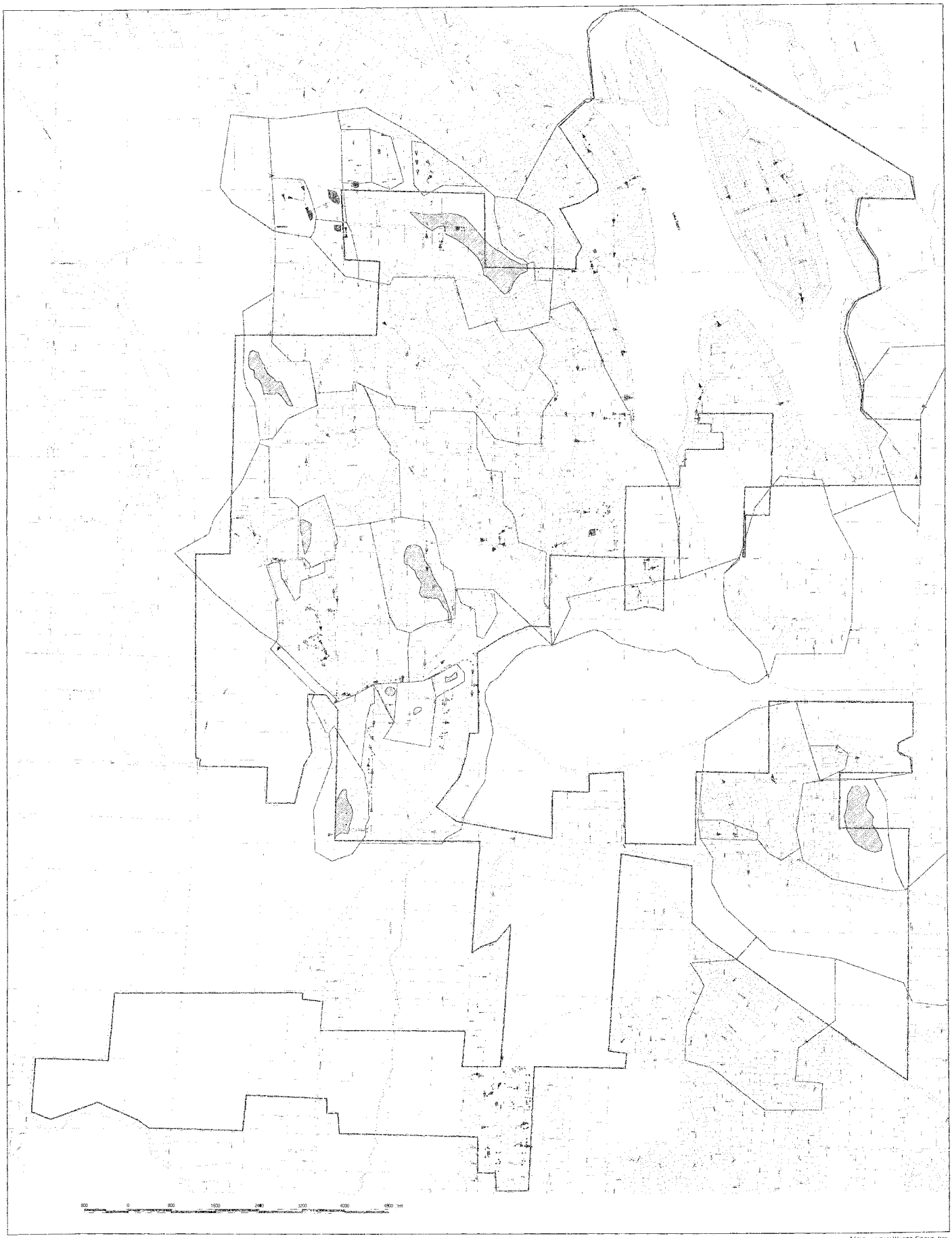

LEGEND

- Basin2.shp
- Cb.shp
- Mh.shp
- Pipe.shp
- Ditches.shp
- Citylimit.shp
- 100yr_flood.shp
- Lake.shp
- County_pipe.shp
- Channels.shp
- Rip.shp
- Roads.shp
- Parcels.shp

Storm Drainage Systems Map

City of Bonney Lake

MONTGOMERY WATER GROUP, INC.

N

W E

S

DRAWINGS

CAPITAL PROJECT NO. 1

POTHOLE 1 PUMP STATION AND CONVEYANCE IMPROVEMENTS

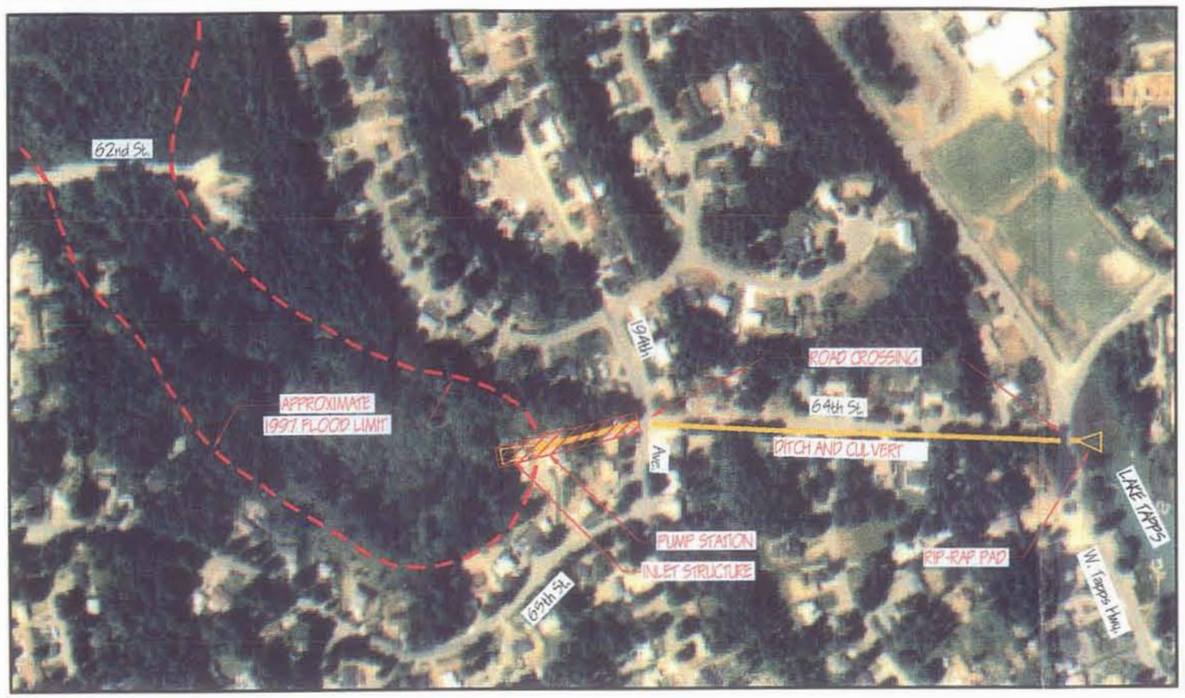

POTENTIAL PERMIT REQUIREMENTS:

- COE NATIONWIDE PERMIT (NWP)
- ECOLOGY SECTION 401 WATER QUALITY CERTIFICATION
- SHORELINE SUBSTANTIAL DEVELOPMENT (OUTFALL)
- WDFW HYDRAULIC PROJECT APPROVAL

DESIGN/IMPLEMENTATION REQUIREMENTS:

- PREPARE TOPOGRAPHIC, BOUNDARY SURVEY
- SET DESIGN CRITERIA (LEVEL OF FLOOD PROTECTION)
- ESTABLISH INUNDATION LIMITS
- ACQUIRE EASEMENTS
- COORDINATE WITH PUGET POWER (LAKE TAPPS OUTFALL/ PUMP STATION POWER)

ESTIMATED PROJECT COST: $215,000

- INLET STRUCTURE
- PUMPS/PUMP STATION AND CONTROLS
- 3-PHASE POWER LINE
- 1400 ft 10" HDPE FORCE MAIN
- CULVERT/DITCH IMPROVEMENTS

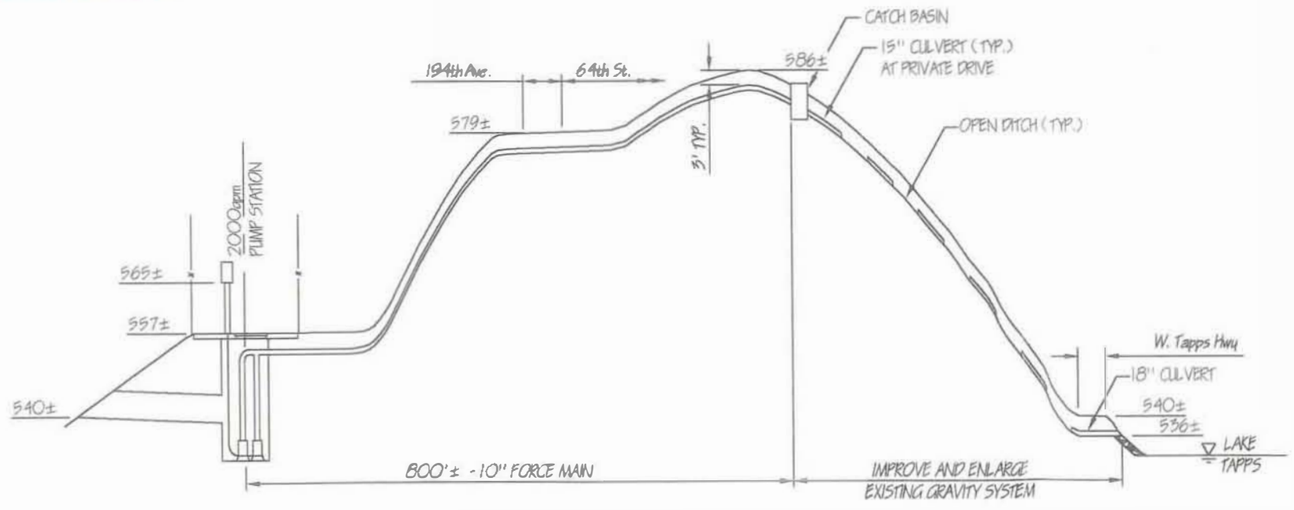

PROFILE

NOT TO SCALE

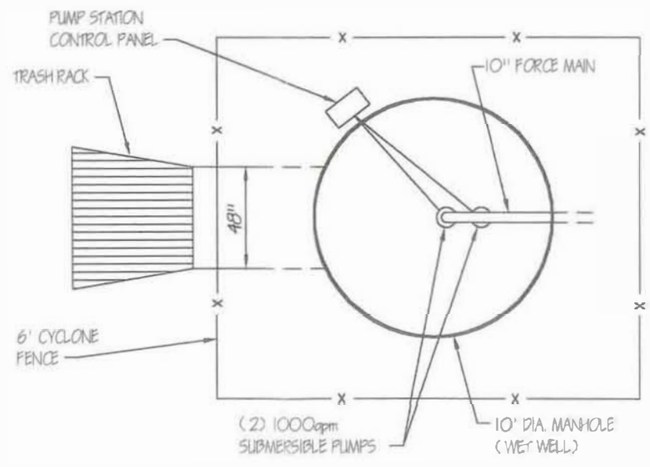

PLAN - PUMP STATION

NOT TO SCALE

Drawing 1
Capital Project No. 1
Stormwater Comprehensive Plan

City of Bonney Lake

MONTGOMERY WATER GROUP, INC.
Water Resources Engineering

101501f1.dwg
9/29/01
MWG

CAPITAL PROJECT NO. 2

POTHOLE 4 STORAGE AND 82nd ST. IMPROVEMENTS

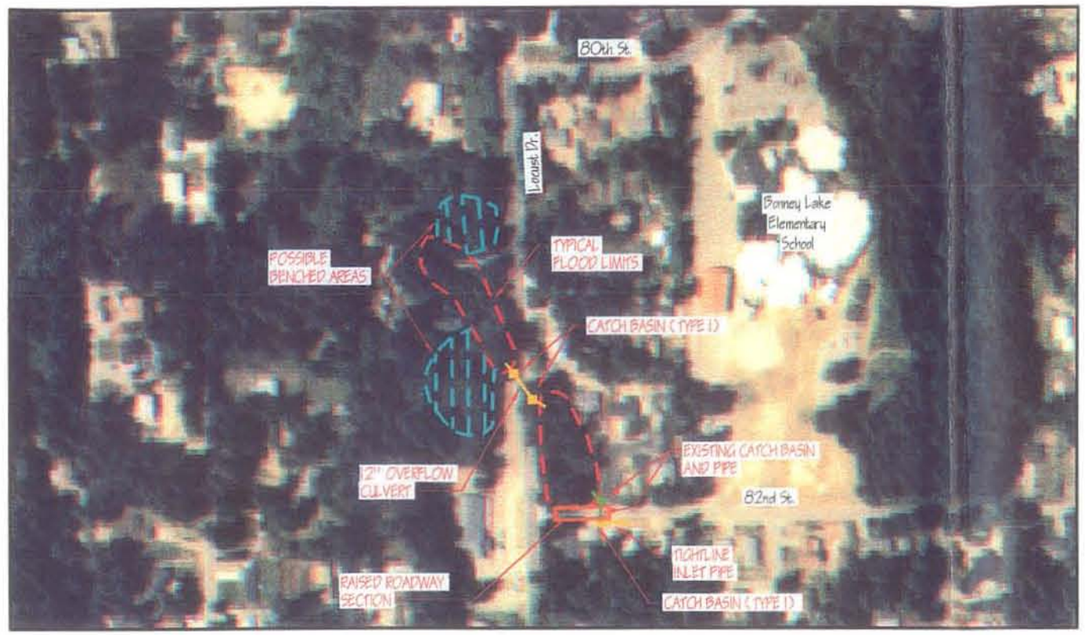

POTENTIAL PERMIT REQUIREMENTS:

- COE NATIONWIDE PERMIT (NWP)
- ECOLOGY SECTION 401 WATER QUALITYCERTIFICATION
- WDFW HYDRAULIC PROJECT APPROVAL
- LOCAL PROJECT PERMITS

DESIGN/IMPLEMENTATION REQUIREMENTS:

- PREPARE TOPOGRAPHIC SURVEY
- SET DESIGN CRITERIA (LEVEL OF PROTECTION)
- ACQUIRE EASEMENTS FOR BENCH EXPANSIONS
- COORDINATE WITH LOCUST DR. IMPROVEMENTS

ESTIMATED PROJECT COST: $132,000

- RAISE 82nd. ST.
- LOCUST DR. CULVERTS
- TIGHTLINE EXISTING DRIVEWAY CULVERT
- EXCAVATE BENCH AREA

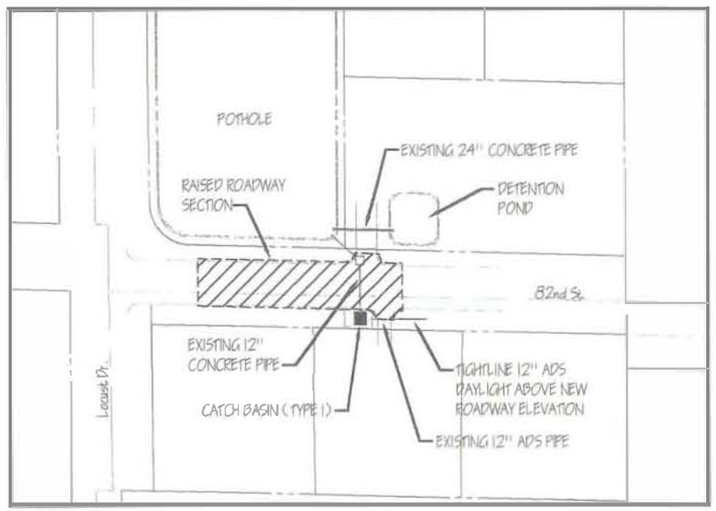

PLAN
NOT TO SCALE

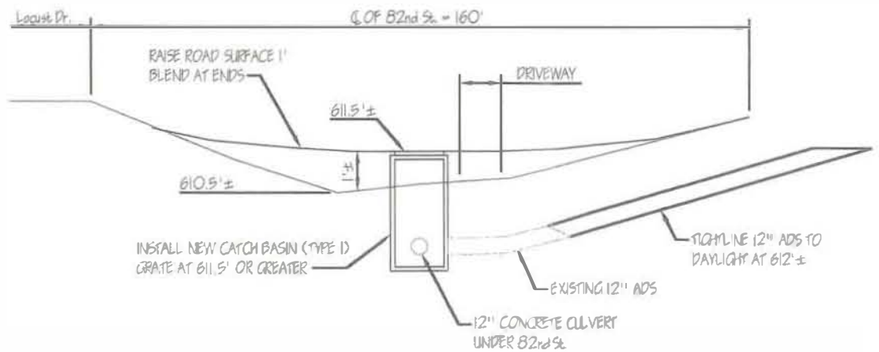

ROADWAY SECTION
NOT TO SCALE

Drawing 2
Capital Project No. 2
Stormwater Comprehensive Plan

City of Bonney Lake

MONTGOMERY WATER GROUP, INC.
Water Resources Engineering

DWG: MWG
DATE: 6/29/10
FILE: 1305F2.dwg

CAPITAL PROJECT NO. 3

81st & 182nd ST STORM DRAINAGE IMPROVEMENTS

POTENTIAL PERMIT REQUIREMENTS:

- LOCAL PROJECT PERMITS

DESIGN/IMPLEMENTATION REQUIREMENTS:

- HYDRAULIC ANALYSIS OF DOWNSTREAM SYSTEM
- SITE AND DRAINAGE SYSTEM SURVEY
- HYDROLOGIC ANALYSIS TO VERIFY 100-YEAR FLOWS

ESTIMATED PROJECT COST: $52,000

- 575' OF 12" DRAINAGE PIPE
- TYPE 1 CATCH BASINS (3)
- SHOULDER IMPROVEMENTS

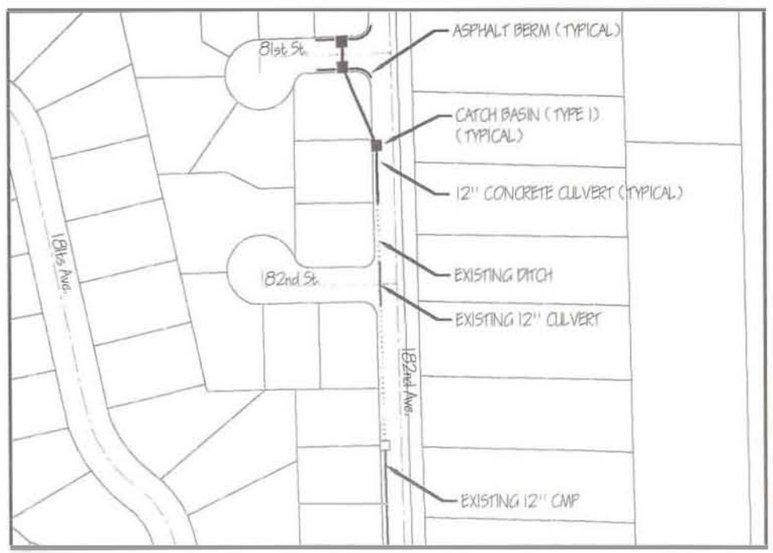

PLAN
NOT TO SCALE

Drawing 3
Capital Project No. 3
Stormwater Comprehensive Plan

City of Bonney Lake

MONTGOMERY WATER GROUP, INC.
Water Resources Engineering

1015DIF3.dwg
8/29/01
mtc, MWG

CAPITAL PROJECT NO. 4

BONNEY LAKE MANOR INFILTRATION SYSTEM IMPROVEMENTS

N

POTENTIAL PERMIT REQUIREMENTS:

- LOCAL PROJECT PERMITS

DESIGN/IMPLEMENTATION REQUIREMENTS:

- HYDRAULIC ANALYSIS TO VERIFY 100-YEAR FLOWS
- GEOTECHNICAL ANALYSIS TO DETERMINE INFILTRATION RATE
- SITE AND DRAINAGE SYSTEM SURVEY

ESTIMATED PROJECT COST: $23,000

- 50' NEW INFILTRATION TRENCH
- 50' REPLACE EXISTING INFILTRATION TRENCH
- CATCH BASIN

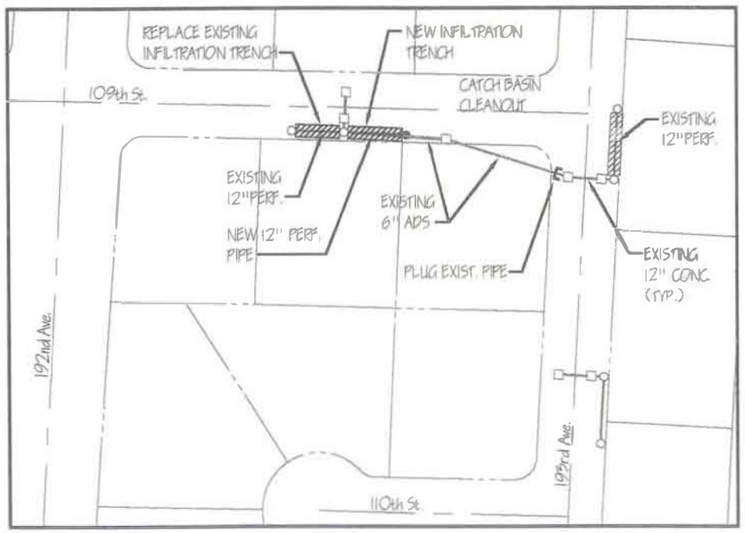

PLAN
NOTTO SCALE

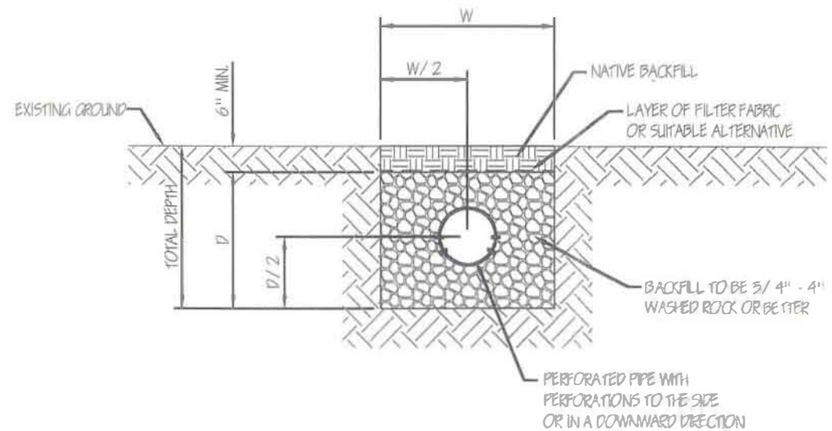

STORMWATER INFILTRATION TRENCH SECTION
NOT TO SCALE

Drawing 4
Capital Project No. 4
Stormwater Comprehensive Plan

City of Bonney Lake

MONTGOMERY WATER GROUP, INC.
Water Resources Engineering

10150IF4.dwg
8/29/01
mtc, MWG

CAPITAL PROJECT NO. 5

77th ST. & 183rd. AVE. INFILTRATION SYSTEM IMPROVEMENTS

POTENTIAL PERMIT REQUIREMENTS:
- LOCAL PROJECT PERMITS

DESIGN/IMPLEMENTATION REQUIREMENTS:
- HYDROLOGIC ANALYSIS TO VERIFY 100-YEAR STORM FLOWS
- GEOTECHNICAL ANALYSIS TO DETERMINE INFILTRATION RATE
- SITE SURVEY TO DETERMINE TRENCH LOCATION

ESTIMATED PROJECT COST: $10,000
- INFILTRATION TRENCHES
- CATCH BASIN

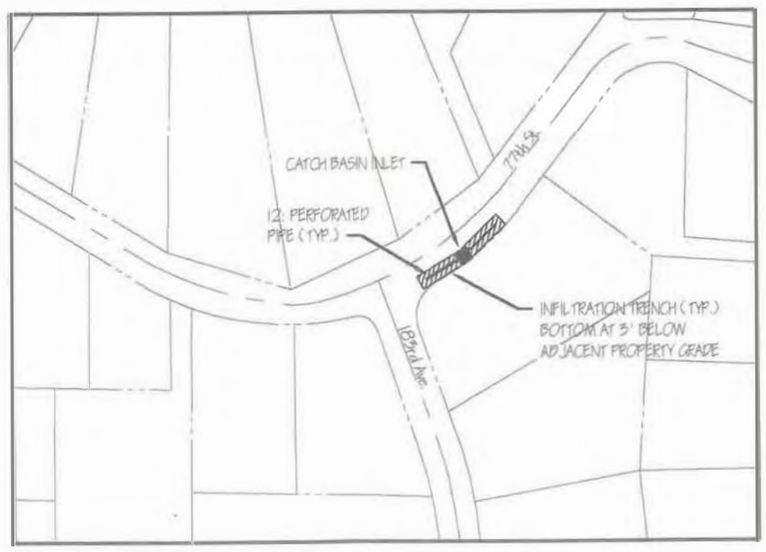

PLAN
NOT TO SCALE

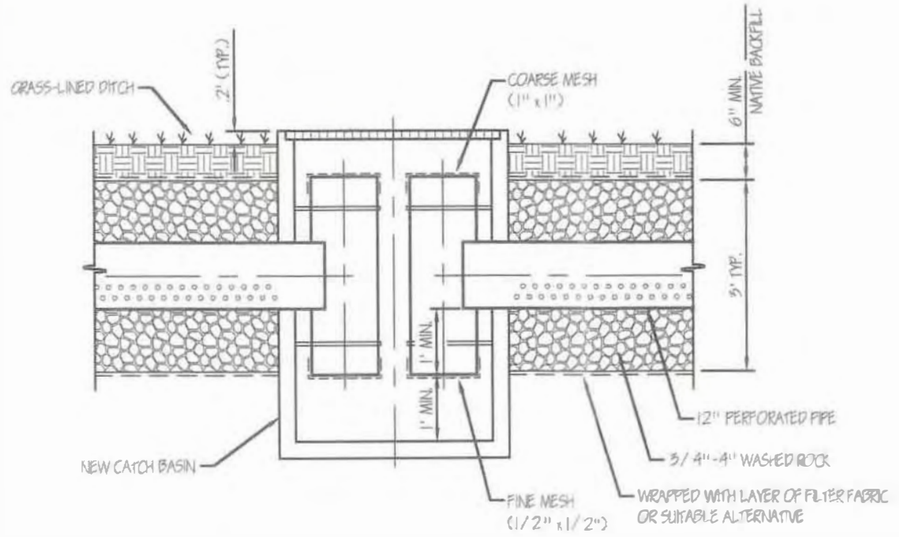

TYPICAL SECTION - INFILTRATION TRENCH
NOT TO SCALE

Drawing 5
Capital Project No. 5
Stormwater Comprehensive Plan

City of Bonney Lake

MONTGOMERY WATER GROUP, INC.
Water Resources Engineering

CAPITAL PROJECT NO. 6

LAKE TAPPS OUTFALL IMPROVEMENTS AT CHURCH LAKE DR.

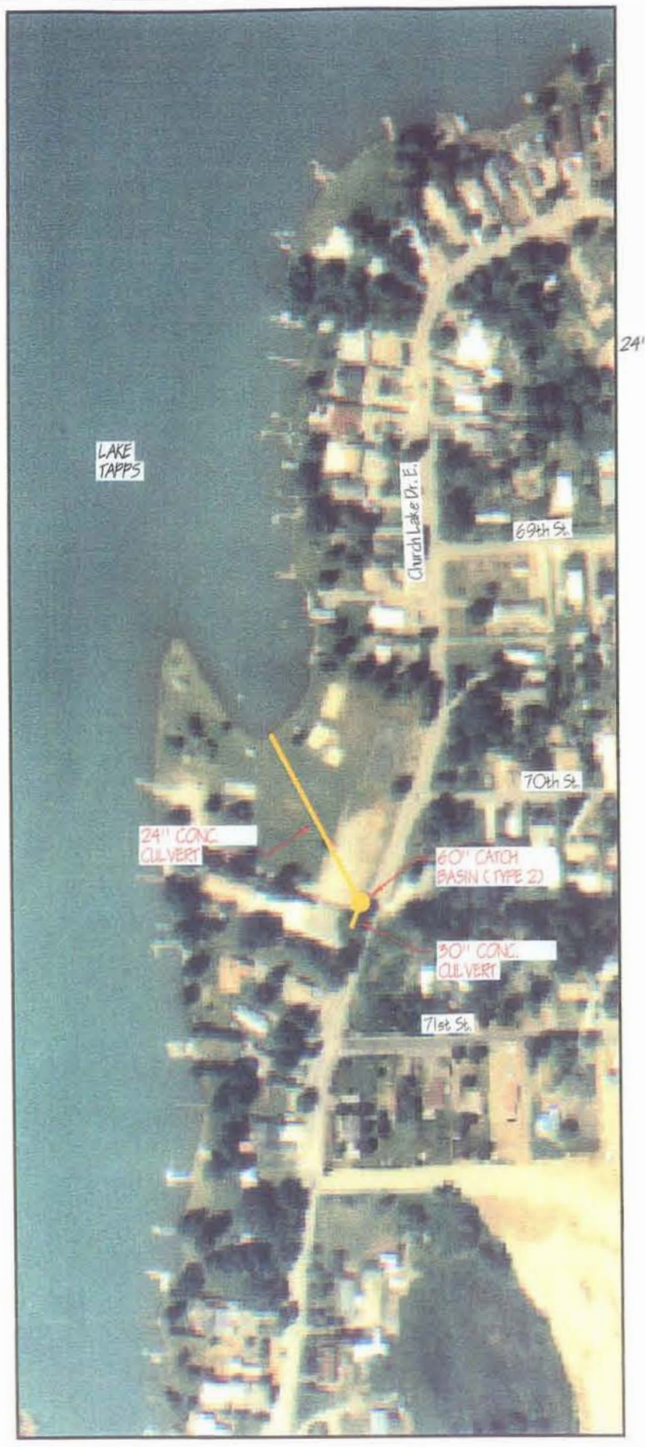

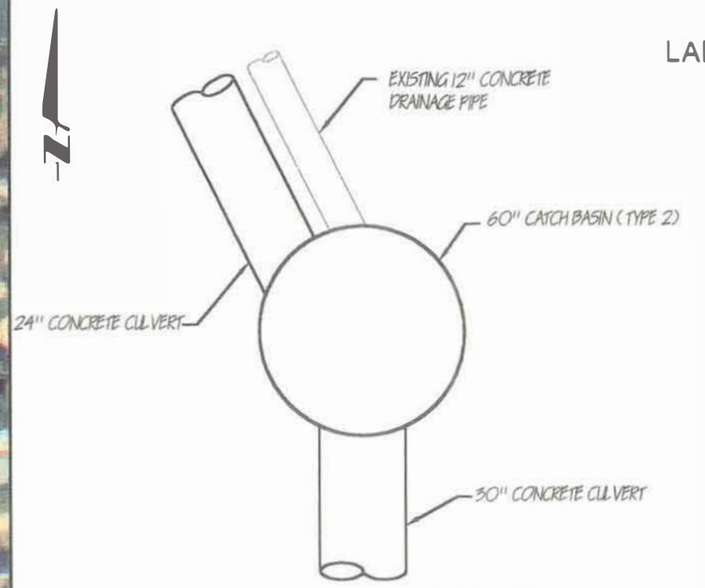

PLAN - NEW CATCH BASIN
NOT TO SCALE

POTENTIAL PERMIT REQUIREMENTS:
- SHORELINE SUBSTANTIAL DEVELOPMENT
- WDFW HYDRAULIC PROJECT APPROVAL
- LOCAL PROJECT PERMITS

DESIGN/IMPLEMENTATION REQUIREMENTS:
- HYDROLOGIC ANALYSIS TO DETERMINE 100-YEAR STORM FLOWS
- HYDRAULIC ANALYSIS OF DOWNSTREAM SYSTEM
- SITE AND DRAINAGE SYSTEM SURVEY

ESTIMATED PROJECT COST: $42,000
- 350' OF 24" DRAINAGE PIPE
- 20' OF 30" DRAINAGE PIPE
- TYPE 2 CATCH BASIN

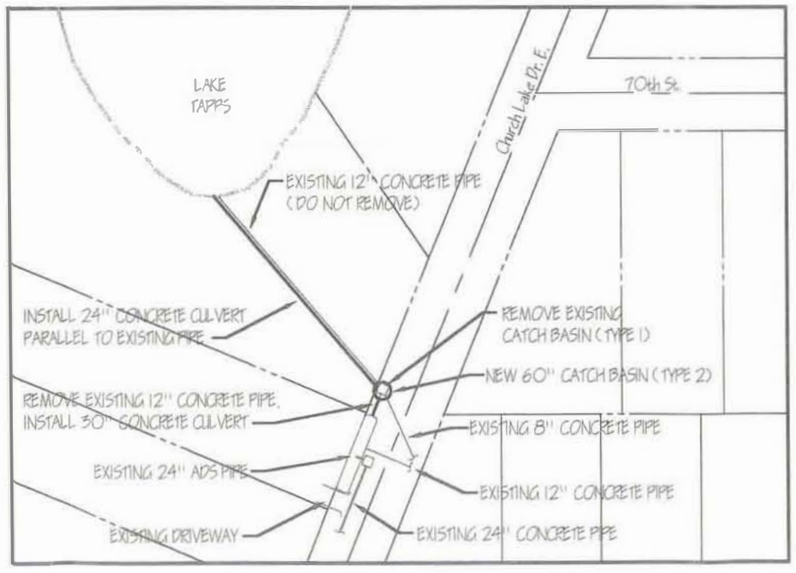

PLAN
NOT TO SCALE

Drawing 6
Capital Project No. 6
Stormwater Comprehensive Plan

City of Bonney Lake

MONTGOMERY WATER GROUP, INC.
Water Resources Engineering

PIERCE COUNTY
INFILTRATION TRENCH DETAILS

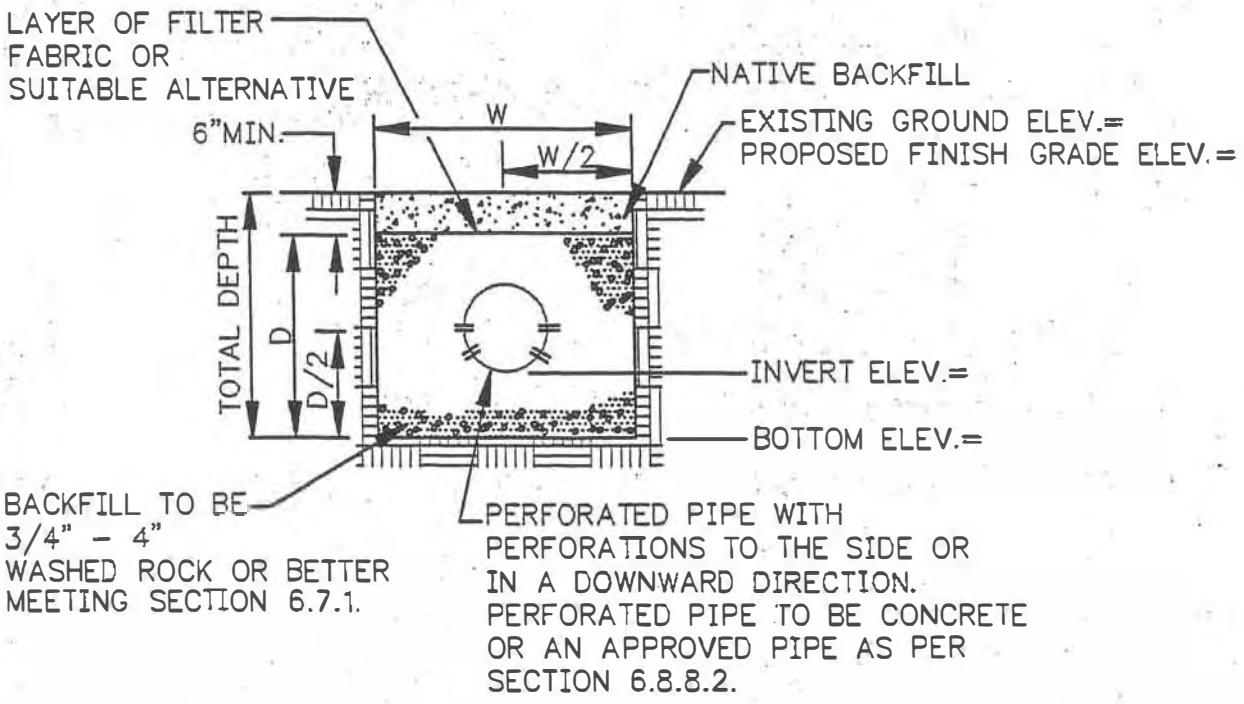

STORMWATER INFILTRATION TRENCH SECTION

N.T.S.

NOTES:

1. PIPE FOR STORM DRAIN INFILTRATION SYSTEMS SHALL MEET THE REQUIREMENTS OF SECTION 6.8.8.2.

2. PERFORATED CONCRETE UNDERDRAIN PIPE MEETING W.S.D.O.T. SPECIFICATIONS CHAPTER 9-05.2 (2) AND A.A.S.H.T.O. DESIGNATION M175, TYPE I, MAY BE USED WITH THE ADDITIONAL CONDITIONS: THE PERFORATIONS SHALL BE CIRCULAR AND A MINIMUM OF 1/2 -INCH IN DIAMETER. THEY SHALL BE CLEANLY CUT AND BE SMOOTH AND UNIFORM WITH NO EXCESS CONCRETE LEFT FROM THE HOLE PERFORATIONS PROCESS. THERE SHALL BE A MINIMUM OF 7 SETS OF PERFORATIONS WITH 2 HOLES PER SET OF PERFORATIONS FOR EACH 3-1/2 FEET OF PIPE LENGTH. RUBBER GASKETS OR GROUTING OF JOINTS FOR PERFORATED PIPE RUNS WILL NOT BE REQUIRED. INSPECTION OF THE PERFORATED CONCRETE PIPE SHALL BE MADE BY THE MUNICIPALITY BEFORE INSTALLATION OF THE PIPE IN THE GROUND.

M-10-2-A.DWG	PIERCE COUNTY STORMWATER MANAGEMENT MANUAL	STORMWATER INFILTRATION TRENCH SECTION
APPROVED:	REF: P.C. DETAILS	APPENDIX: A DETAIL: 10.2
DRAWN: DMG	REV. DATE: MAY 1995	

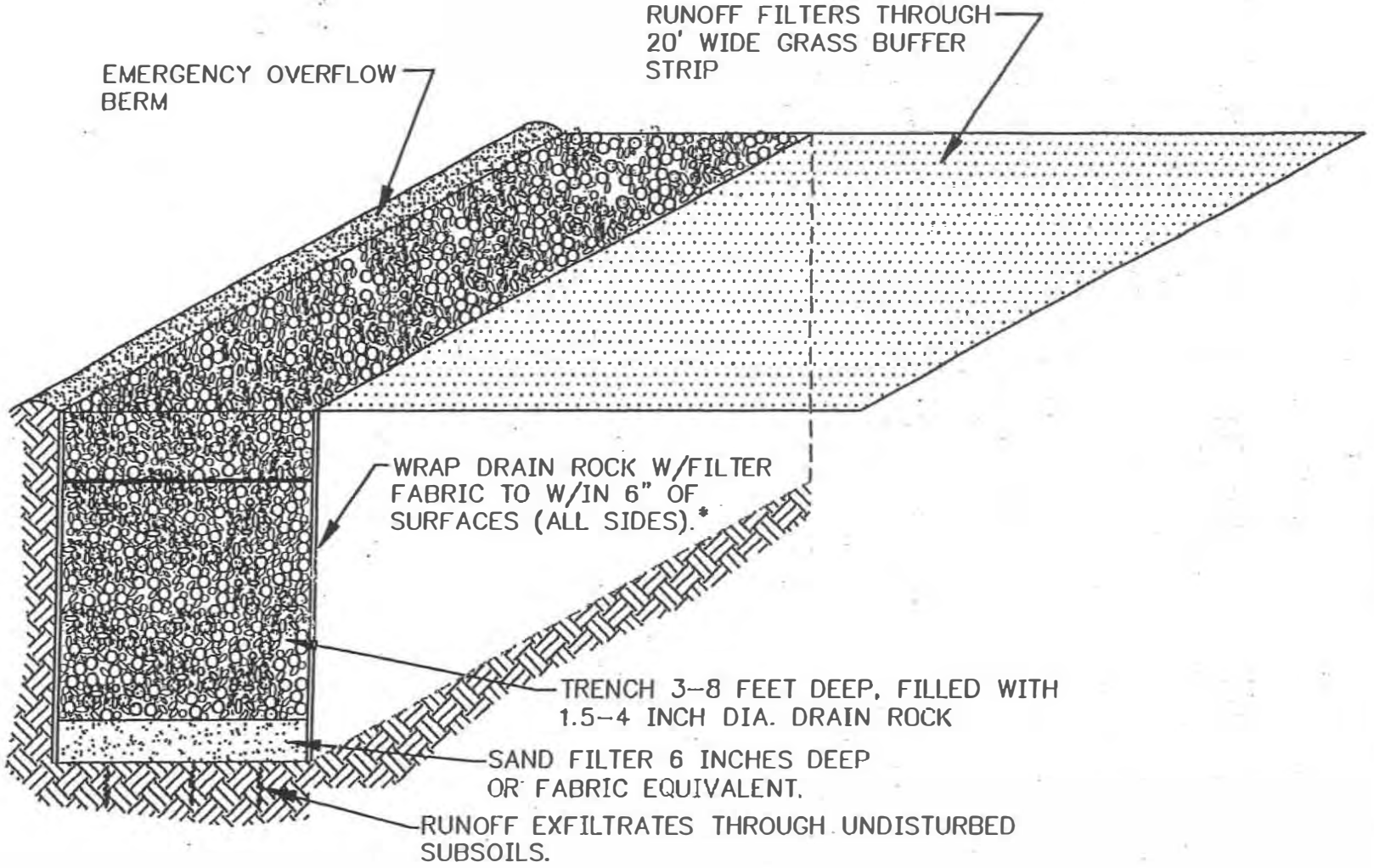

* NOTE: FILTER FABRIC NOT REQUIRED ON BOTTOM IF 6-12 INCHES OF SAND IS USED.

SCHEMATIC OF AN INFILTRATION TRENCH W/GRASS FILTER

N.T.S.

DRAWN: DMG | APPROVED: | M-10-1-A.DWG

REV. DATE: MAY 1995 | REF: K.C., WA SW DESIGN MANUAL | PIERCE COUNTY STORMWATER MANAGEMENT MANUAL

APPENDIX: A DETAIL: 10.1 | SCHEMATIC OF AN INFILTRATION TRENCH